Dimensions

Ashcroft® Duragauge® Pressure Gauge

Case Type 1279

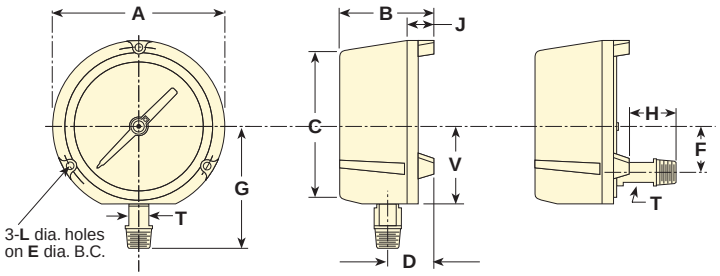

4½″ Lower Connection

4½″ Back Connection

Dial Size Inches	A	B	C	D	E	F	G	H	J	L	T	V	Weight (lbs)
4½	5 13/16 (148)	3⅜ (86)	5 1/16 (129)	1⅝ (41)	5⅜ (137)	1⅝ (41)	3 15/16 (100)	¾ (20)	1 (25)	.218 (6)	⅝ (16)	2⅝ (67)	2½

Case Type 1377

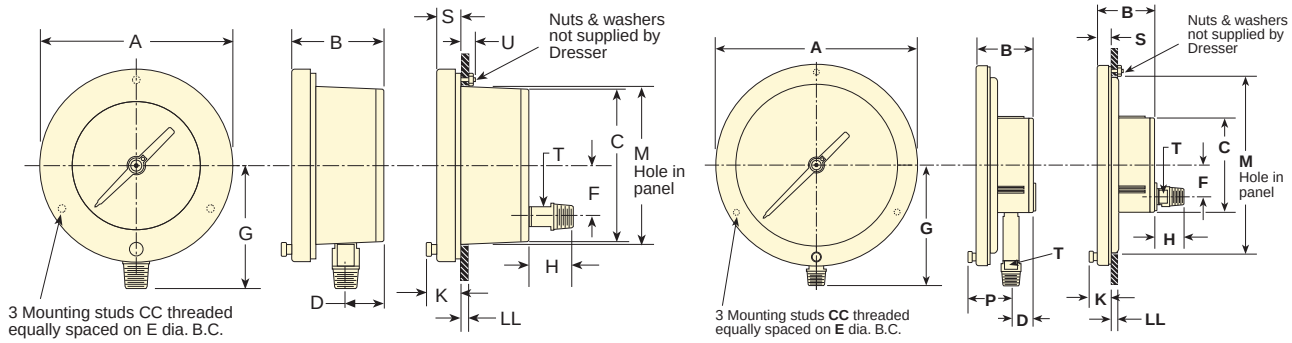

4½″ & 6″ Lower Connection

4½″ & 6″ Back Connection

8½″ Lower Connection

8½″ Back Connection

Dial Size Inches	A	B	C	D	E	F	G	H	K	M	P	S	T	U	CC	LL	Weight (lbs)
4½	6 3/32 (148)	2⅞ (73)	4¾ (121)	1 1/16 (27)	5⅜ (137)	1⅝ (41)	3 15/16 (100)	1⅜ (35)	1 1/16 (27)	4⅞ (124)	2⅛ (54)	⅝ (16)	⅝ (16)	¾ (19)	#10-24	⅛–½ (3)(13)	2½
6	7 9/16 (192)				7 (178)		4½ (114)			6½ (165)					¼-20		3
8½	10 1/16 (257)				9⅝ (244)		6 (152)			9 (229)					¼-20		4½

Case Type 1379

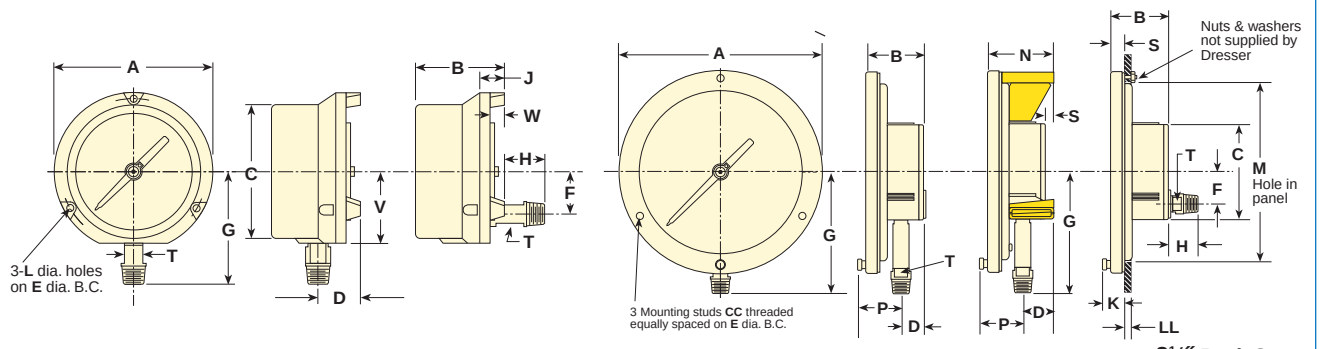

4½″ & 6″ Lower Connection | 4½″ & 6″ Back Connection | 8½″ Lower Conn. | 8½″ Wall Conn. | 8½″ Back Conn.

Dial Size Inches	A	B	C	D	E	F	G	H	J	K
4½	5 13/16 (148)	3 13/32 (86)	4 7/8 (124)	1 5/8 (41)	5 3/8 (137)	1 1/8 (42)	3 15/16 (100)	7/8 (20)	1 1/16 (27)	—
6	7 9/16 (192)	3 1/2 (89)	6 5/8 (162)	1 5/8 (41)	7 (178)	1 1/2 (42)	4 1/2 (114)			
8½	10 1/16 (256)	2 7/8 (73)	4 3/4 (121)	1 1/16 (27)	9 5/8 (244)	1 5/8 (41)	6 (152)	1 3/8 (35)	—	1 1/16 (27)

Dial Size Inches	L	M	N	P	S	T	V	CC	LL	Wgt. (lbs)
4½	.218 (6)	—	—	2 1/8 (54)	—	5/8 (16)	2 5/8 (67)	—	1/8-1/2 (3)(13)	2½
6										3⅛
8½		9 (228)	3 9/32 (83)	—	1 1/16 (17)	—	—	#10-24		4½

Case Type 2462

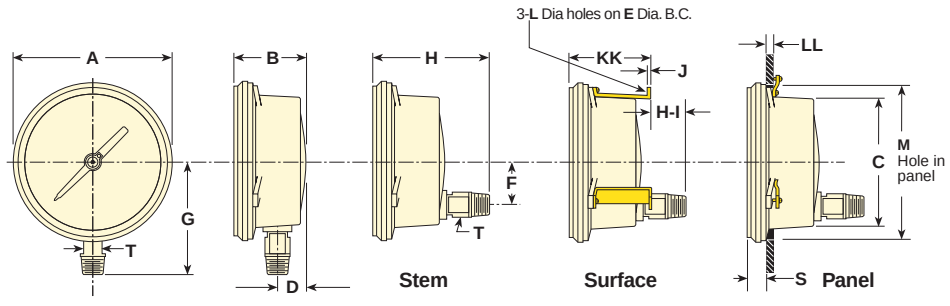

6″ Lower Connection | 6″ Back Connection

Dial Size Inches	A	B	C	D	E	F	G	H	H-1	J	KK	L	LL Min.	LL Max.	M	S	T	Wgt. (lbs)
6	6 3/8 (163)	2 7/16 (62)	4 3/4 (120)	7/8 (22)	5 3/8 (137)	1 5/8 (42)	3 15/16 (100)	4 9/16 (116)	4 9/32 (109)	5/64 (2)	2 11/16 (69)	.218 (6)	1/16 (2)	1/2 (13)	6 (152)	1 1/16 (17)	5/8 (16)	6

Note: Dimensions in brackets ( ) are millimeters.