Frost-Free Sillcocks

- 1/4 turn and Multi turn offering
- Easy grip TPR handle
- Enlarged sill flange with closed ends for easy stable installation and durability
- A built in backflow prevents siphoning of water back into water supply
- Sillcock drains automatically upon water shut off, if hose is removed or open.
- Max operationg pressure: 125 psi water
- Operating temperature: 32°F to 140°F

1/4 Turn Frost-Free Sillcocks

Specifications			
Category	**Webb #**	**Mfr. #**	**Description**
1/4 TURN PRESS	1279230	PROFPSQTPRS6LF	FROSTFREE SLCOK 1/4TURN LF BRS 1/2x6" PRS
1/4 TURN PRESS	1279229	PROFPSQTPRS8LF	FROSTFREE SLCOK 1/4TURN LF BRS 1/2x8" PRS
1/4 TURN PRESS	1279228	PROFPSQTPRS10LF	FROSTFREE SLCOK 1/4TURN LF BRS 1/2x10" PRS
1/4 TURN PRESS	1279232	PROFPSQTPRS12LF	FROSTFREE SLCOK 1/4TURN LF BRS 1/2x12" PRS
1/4 TURN PRESS	1279231	PROFPSQTPRS14LF	FROSTFREE SLCOK 1/4TURN LF BRS 1/2x14" PRS
1/4 TURN THREADED / SWEAT	1279224	PROFPSQT6LF	FROSTFREE SLCOK 1/4TURN LF 1/2x6" THD SWT
1/4 TURN THREADED / SWEAT	1279226	PROFPSQT8LF	FROSTFREE SLCOK 1/4TURN LF 1/2x8" THD SWT
1/4 TURN THREADED / SWEAT	1279222	PROFPSQT10LF	FROSTFREE SLCOK 1/4TURN LF 1/2x10" THD SWT
1/4 TURN THREADED / SWEAT	1279223	PROFPSQT12LF	FROSTFREE SLCOK 1/4TURN LF 1/2x12" THD SWT
1/4 TURN THREADED / SWEAT	1279225	PROFPSQT14LF	FROSTFREE SLCOK 1/4TURN LF 1/2x14" THD SWT

DIM. L	ITEM NO.	
6"	PROFPSQT6LF	PROFPSQTPRS6LF
8"	PROFPSQT8LF	PROFPSQTPRS8LF
10"	PROFPSQT10LF	PROFPSQTPRS10LF
12"	PROFPSQT12LF	PROFPSQTPRS12LF
14"	PROFPSQT14LF	PROFPSQTPRS14LF

SIZE	UNIT	PER CTMR DWG	DATE	REV.
A4	INCH	XXX	XX-XX-XX	X

REVISIONS

REV.	DESCRIPTION	APR.	DATE
A	Initial Release	UPE	2025/11/21

ITEM NO.	ADAPTER
PROFPSQTxLF	
PROFPSQTPRSxLF	

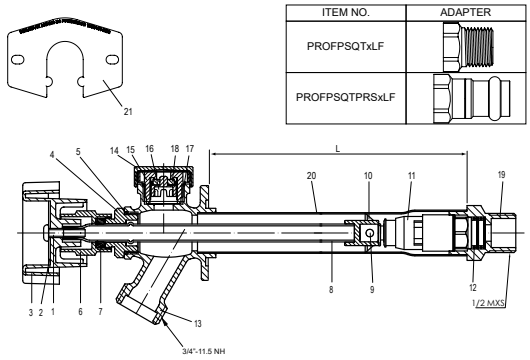

NO.	DESCRIPTION	MATERIAL	Q'TY
1	SCREW	BRASS	1
2	NAME DISC	ALUMINUM	1
3	HANDLE	TPR/ALUMINUM	1
4	NUT	BRASS(C46400)	1
5	O-RING	RUBBER	1
6	NUT	BRASS(C3604)	1
7	WASHER	RUBBER	1
8	STEM	BRASS(C27000)	1
9	SET SCREW	S.S	1
10	WASHER	RUBBER	1
11	CARTRIDGE	BRASS(C46400)	1
12	O-RING	RUBBER	2
13	VALVE BODY	BRASS(C6802 MOD)	1
14	VB COVER	PLASTIC	1
15	VB BODY	PLASTIC	1
16	VB STEM	PLASTIC	1
17	O-RING	RUBBER	1
18	SEAT	RUBBER	1
19	ADAPTER	BRASS(C46400)	1
20	TUBE	BRASS(C27000)	1
21	INSERT	PLASTIC	1

DO NOT SCALE DRAWING

TOLERANCES : UNLESS OTHERWISE SPECIFIED
. XX ± 0.010 ANGLES ± 1/2°
. XXX ± 0.005 FRACTION ± 1/64

W.T.:
MATERIAL : SEE LIST
FINISH :

C.S.B. INTERNATIONAL PRODUCTS INC.

TITLE FROSTFREE SLCOK 1/4 TURN

ITEM No.

REV. A

DRAWN Makey 11/21/25

APR.

SCALE FREE

PROJECTION

SHEET : 1 / 1

FILE XXX

- continued on next page -

Frost-Free Sillcocks

Multi Turn Sillcocks

Specifications			
Category	**Webb #**	**Mfr. #**	**Description**
MULTI-TURN PRESS	1279211	PROFPSMTPRS6LF	FROSTFREE SLCOK MTURN LF BRS 1/2x6" PRS
MULTI-TURN PRESS	1279212	PROFPSMTPRS8LF	FROSTFREE SLCOK MTURN LF BRS 1/2x8" PRS
MULTI-TURN PRESS	1279209	PROFPSMTPRS10LF	FROSTFREE SLCOK MTURN LF BRS 1/2x10" PRS
MULTI-TURN PRESS	1279210	PROFPSMTPRS12LF	FROSTFREE SLCOK MTURN LF BRS 1/2x12" PRS
MULTI-TURN THREADED / SWEAT	1279207	PROFPSMT6LF	FROSTFREE SLCOK MTURN LF 1/2x6" THD SWT
MULTI-TURN THREADED / SWEAT	1279208	PROFPSMT8LF	FROSTFREE SLCOK MTURN LF 1/2x8" THD SWT
MULTI-TURN THREADED / SWEAT	1279204	PROFPSMT10LF	FROSTFREE SLCOK MTURN LF 1/2x10" THD SWT
MULTI-TURN THREADED / SWEAT	1279205	PROFPSMT12LF	FROSTFREE SLCOK MTURN LF 1/2x12" THD SWT
MULTI-TURN PEX CRIMP	1279219	PROFPSMTPXB6LF	FROSTFREE SLCOK MTURN LF 1/2x6" PEX CRMP
MULTI-TURN PEX CRIMP	1279220	PROFPSMTPXB8LF	FROSTFREE SLCOK MTURN LF 1/2x8" PEX CRMP
MULTI-TURN PEX CRIMP	1279217	PROFPSMTPXB10LF	FROSTFREE SLCOK MTURN LF 1/2x10" PEX CRMP
MULTI-TURN PEX CRIMP	1279218	PROFPSMTPXB12LF	FROSTFREE SLCOK MTURN LF 1/2x12" PEX CRMP
MULTI-TURN PEX EXPANSION	1279215	PROFPSMTPXA6LF	FROSTFREE SLCOK MTURN LF 1/2x6" PEX EXP
MULTI-TURN PEX EXPANSION	1279216	PROFPSMTPXA8LF	FROSTFREE SLCOK MTURN LF 1/2x8" PEX EXP
MULTI-TURN PEX EXPANSION	1279213	PROFPSMTPXA10LF	FROSTFREE SLCOK MTURN LF 1/2x10" PEX EXP
MULTI-TURN PEX EXPANSION	1279214	PROFPSMTPXA12LF	FROSTFREE SLCOK MTURN LF 1/2x12" PEX EXP

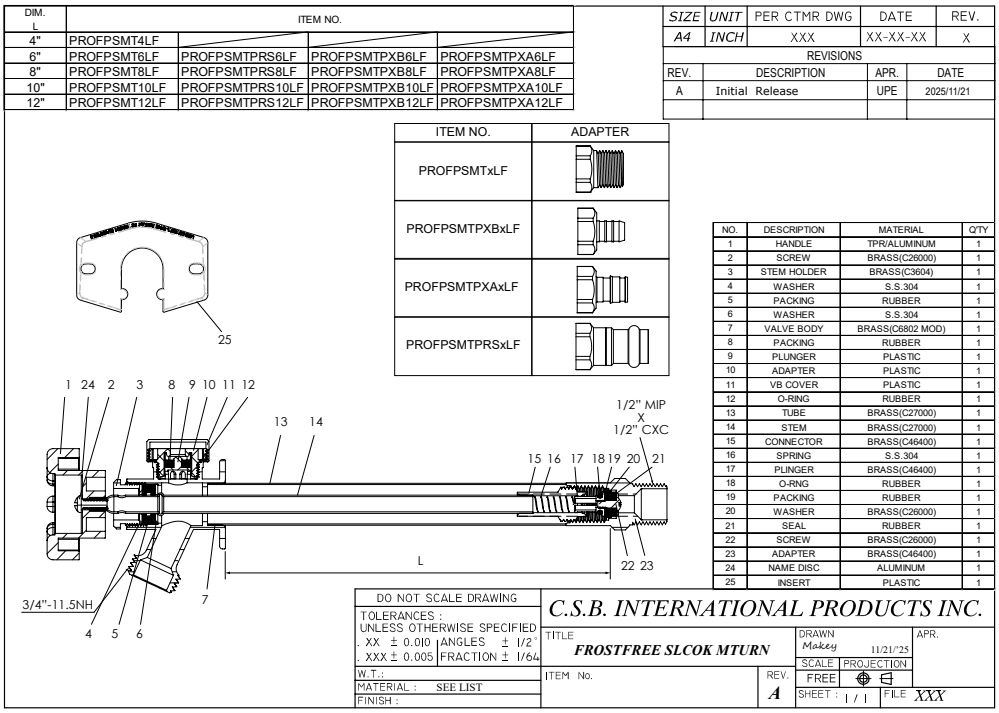

PROFPSMTPRS6LF

PROFPSMTPXA6LF

PROFPSMTPXB6LF

PROFPSQT6LF